产品规格书

Product specification

锂电池主动均衡保护板

Lithium battery active balancing protection board

JK-BD6A24S-15PD

版本：23.5

成都极空科技有限公司

Chengdu Jikong Technology Co., Ltd

1. 产品概述(Product Overview) 5
1.1. BMS概述(BMS Overview) 5
1.2. 功能特性(Functional characteristics) 6
1.3. 结构框图(Structural block diagram) 7
2. 产品选型指南(Product selection guide) 8
2.1. 产品功能配置表(Product function configuration table) 8
2.2. 产品适配指南(Product adaptation guide) 9
2.3. 保护板功能选配指南(Protection board function selection guide) 10
3. 功能介绍及使用说明(Function introduction and usage instructions) 12
3.1. 主动均衡(Active equalization) 12
3.2. UART功能(UART function) 12
3.3. 显示屏功能(Display function) 12
3.4. 加热功能(Heating function) 13
3.5. 报警功能(Alarm function) 13
3.6. 电池组并联功能(Battery parallel function) 13
3.7. ACC/充电器检测功能(ACC/Charger detection function)) 13
3.8. 放电预充功能(Discharge precharge function) 14
3.9. 充电过压保护及恢复(Charge overvoltage protection and recovery) 14
3.10. 放电欠压保护及恢复(Discharge undervoltage protection and recovery) 14
3.11. 充电过流保护及恢复(Charge overcurrent protection and recovery) 15
3.12. 放电过流保护及恢复(Discharge overcurrent protection and recovery) 15
3.13. 过温保护及恢复(Over temperature protection and recovery) 15
3.14. 低温保护及恢复(Low temperature protection and recovery) 16
3.15. 短路保护及恢复(Short circuit protection and recovery) 16
3.16. 应急开关(Emergency switch) 17
3.17. 智能休眠(Intelligent sleep) 17
3.18. 通信功能(communication function) 17
4. 主要参数(Main parameter) 19
4.1. 保护板基本参数（Protection board Basic parameter） 19
4.2. 默认参数(Default parameters) 20
5. 接口定义(Interface definition) 22
5.1. 产品外形(Product Appearance) 22
5.2. 产品连接器、LED定义(Product connector,LED definition) 23
5.3. 产品尺寸(Product size) 26
5.4. 安装方法(Installation method) 27

6. 设备使用说明(APP operation Instructions) 28
6.1. APP安装（APP installation） 28
6.2. 设备激活(Device activation) 29
6.3. 参数设置(Parameter setting) 29
7. 配件清单(Accessories list) 30

版本修改记录

修订日期	版本号	修订概要	作者
2026.03.23	V23.1.1	首次发布	张海艳
2026.10.08	V23.5	接线端子改为M6	任凯

1. 产品概述(Product Overview)

1.1. BMS概述(BMS Overview)

锂电池智能保护板是为大容量串联锂电池组量身打造的管理系统，具备电压采集、大电流主动均衡、过充过放过流过温保护、库仑计、蓝牙通信、GPS远程等功能。可适用于磷酸铁锂、三元锂等电池种类。

Lithium battery intelligent protection board is a management system tailored for large capacity series lithium battery pack,with voltage acquisition,high current active balancing,overcharge over pass temperature protection,coulomb meter,Bluetooth communication,GPS remote and other functions.Can be applied to lithium iron phosphate,ternary lithium battery type.

保护板依托具备自主知识产权的能量转移式主动均衡技术，可以实现最大持续0.6A的均衡电流。大电流主动均衡技术可以最大程度的保证电池一致性、提高电池续航里程、延缓电池衰老。

The protection board relies on the energy transfer active balancing technology with independent intellectual property rights,which can achieve A maximum continuous 0.6A balance current.The high current active equalization technology can ensure the consistency of the battery to the greatest extent,improve the battery range and delay the aging of the battery.

保护板有配套的手机APP，支持Android和IOS操作系统。APP可以通过手机蓝牙连接到保护板以查看电池工作状态、修改保护板的各项工作参数、控制充放电开关等等。保护板体积小、操作简单、功能全，可广泛应用于小型观光车、代步车、共享汽车、大功率储能、基站备用电源、太阳能电站等产品的电池PACK。

The protection board has a mobile APP supporting Android and IOS operating systems.The APP can be connected to the protection board through the Bluetooth of the mobile phone to check the working status of the battery,modify the working parameters of the protection board,control the charge and discharge switch,and so on.The protection board is small in size,simple in operation and full in function,and can be widely used in battery packs of small sightseeing vehicles,mobility scooters,shared cars,high-power energy storage,base station backup power supply,solar power stations and other products.

1.2. 功能特性(Functional characteristics)

- LED蓝牙状态指示
- APP蓝牙远程操作
- 电池容量计算
- 高精度电压采集(±3mV)
- 高精度电流采集
- 支持信息屏幕显示
- 精准时间日志记录
- 支持RS485(选配)
- 支持CAN(选配)
- 支持并联功能(选配)
- 支持报警功能(选配)
- 支持加热功能(选配)
- ACC检测功能(选配)
- 一线通(选配)
- 放电预充功能
- 支持GPS通讯
- 充电过流保护
- 充电过压保护
- 充电过温保护
- 充电低温保护
- 放电过流保护
- 放电欠压保护
- 放电过温保护
- 短路保护

- **LED Bluetooth status indicator**
- **APP Bluetooth remote operation**
- **Battery capacity calculation**
- **High precision voltage acquisition(±3mV)**
- **High precision current acquisition**
- **Support information screen display**
- **Accurate time logging**
- **Support RS485(Optional)**
- **Support CAN(Optional)**
- **Support parallel function(Optional)**
- **Support alarm function(Optional)**
- **Support heating function(Optional)**
- **ACC detection function(Optional)**
- **One-wire(Optional)**
- **Discharge precharge function**
- **Support GPS communication**
- **Charge overcurrent protection**
- **Charge overvoltage protection**
- **Charge over temperature protection**
- **Low temperature protection during charge**
- **Discharge overcurrent protection**
- **Discharge undervoltage protection**
- **Discharge over temperature protection**
- **Short circuit protection**

1.3. 结构框图(Structural block diagram)

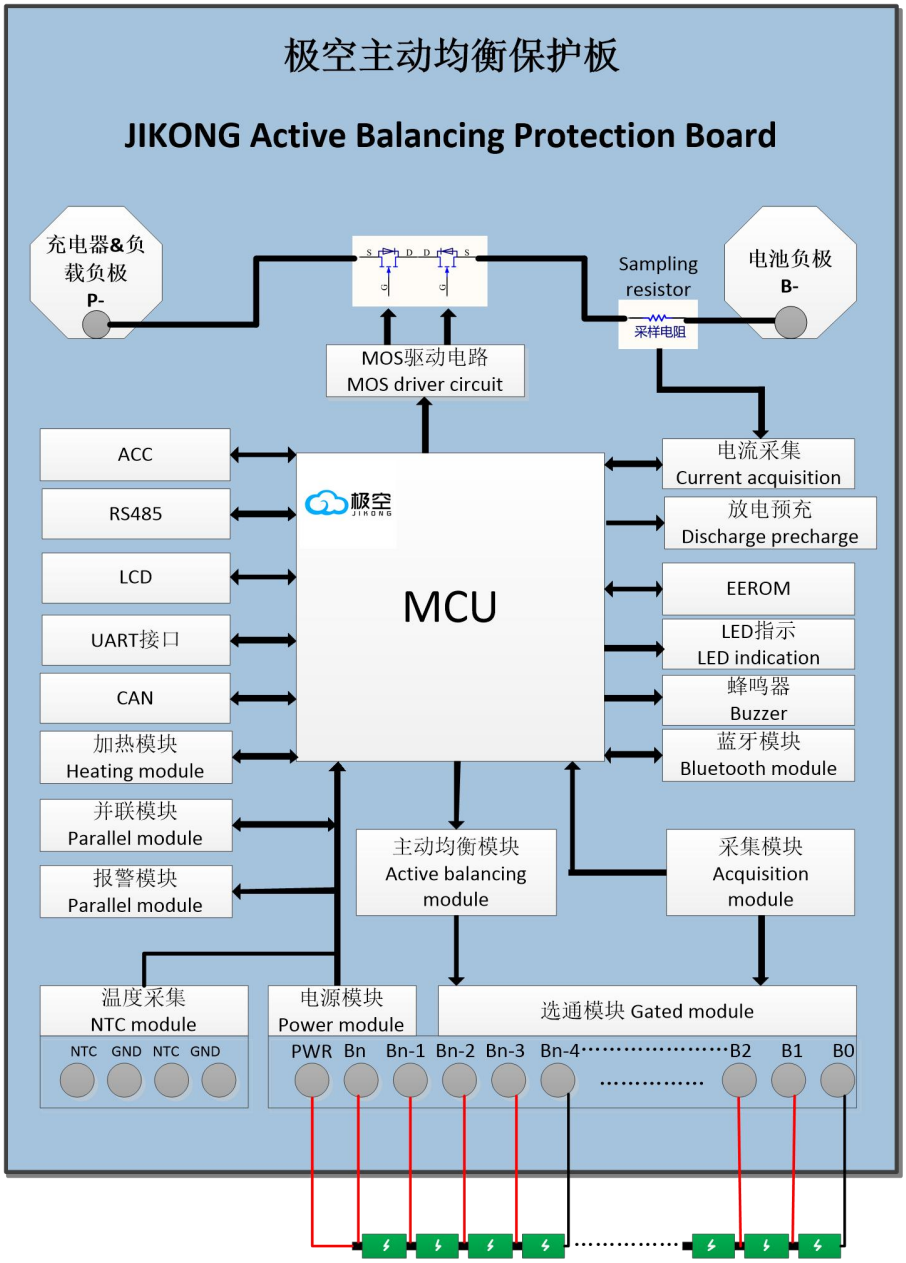

JK-BD6A24S-15PD结构框图

JK-BD6A24S-15PD structure block diagram

2. 产品选型指南(Product selection guide)

2.1. 产品功能配置表(Product function configuration table)

产品规格 (Product specification)	JK-BD6A24S-15PD	
序号 (Serial number)	功能 （Function）	配置 （Configuration）
1	主动均衡电流 (Active equalizing current)	0.6A
2	蓝牙功能 (Bluetooth function)	标配 (Standard option)
3	UART接口 (UART interface)	标配 (Standard option)
4	NTC数量 (NTC quantity)	1路内置，2路外置
5	CAN	选配 (Optional)
6	RS485	选配 (Optional)
7	一线通 (One-wire)	选配 (Optional)
8	显示屏接口 (Display interface)	标配 (Standard option)
9	加热功能 (Heating function)	选配 (Optional)
10	报警功能 (Alarm function)	选配 (Optional)
11	电池组并联功能 (Battery parallel function)	选配 (Optional)
12	ACC检测功能 (ACC detection function)	选配 (Optional)
13	充电过压、过流保护 (Charging overvoltage,overcurrent protection)	标配 (Standard option)
14	放电欠压、过流保护 (Discharge under voltage,over	标配 (Standard option)

	currentprotection)	
15	短路保护 (Short circuit protection)	标配 (Standard option)

2.2. 产品适配指南(Product adaptation guide)

序号 (Serial number)	产品规格 （Product specification）	电池类型 （Battery type）	适配串数 （Number of adaptive battery strings）
1	JK-BD6A24S-15PD	三元锂电池 (Ternary lithium battery)	7～24
		铁锂电池 (Lithium iron battery)	8～24
		钛酸锂电池 (Lithium titanate battery)	14～24
2	JK-BD6A20S-15PD	三元锂电池 (Ternary lithium battery)	7～20
		铁锂电池 (Lithium iron battery)	8～20
		钛酸锂电池 (Lithium titanate battery)	14～20
3	JK-BD6A17S-15PD	三元锂电池 (Ternary lithium battery)	7～17
		铁锂电池 (Lithium iron battery)	8～17
		钛酸锂电池 (Lithium titanate battery)	14～17

2.3. 保护板功能选配指南(Protection board function selection guide)

序号 (Serial number)	电池串数 （Battery string）	选配功能 (Optional function)	产品型号 (Product model)
1	21～24	标配 (Standard option)	**JK-BD6A24S-15PD**
2		标配+CAN通信 (Standard+CAN communication)	**JK-BD6A24S-15PDC**
3		标配+RS485通信 (Standard+RS485 communication)	**JK-BD6A24S-15PDR**
4		标配+加热 （Standard+heating）	**JK-BD6A24S-15PDH**
5		标配+加热+CAN通信 （Standard+heating+CAN communication）	**JK-BD6A24S-15PDHC**
6		标配+加热+RS485通信 (Standard+heating+RS485 communication)	**JK-BD6A24S-15PDHR**
7		标配+加热+CAN+RS485通信 (Standard+heating+CAN communication+RS485communication)	**JK-BD6A24S-15PDHCR**
8	18～20	标配 (Standard option)	**JK-BD6A20S-15PD**
9		标配+CAN通信 (Standard+CAN communication)	**JK-BD6A20S-15PDC**
10		标配+RS485通信 (Standard+RS485communication)	**JK-BD6A20S-15PDR**
11		标配+加热 （Standard+heating）	**JK-BD6A20S-15PDH**
12		标配+加热+CAN通信 （Standard+heating+CAN communication）	**JK-BD6A20S-15PDHC**

13		标配+加热+RS485通信 (Standard+heating+RS485 communication)	**JK-BD6A20S-15PDHR**
14		标配+加热+CAN+RS485通信 (Standard+heating+CAN communication+RS485 communication)	**JK-BD6A20S-15PDHCR**
15	7～17	标配 (Standard option)	**JK-BD6A17S-15PD**
16		标配+CAN通信 (Standard+CAN communication)	**JK-BD6A17S-15PDC**
17		标配+RS485通信 (Standard+RS485communication)	**JK-BD6A17S-15PDR**
18		标配+加热 （Standard+heating）	**JK-BD6A17S-15PDH**
19		标配+加热+CAN通信 （Standard+heating+CAN communication）	**JK-BD6A17S-15PDHC**
20		标配+加热+RS485通信 (Standard+heating+RS485 communication)	**JK-BD6A17S-15PDHR**
21		标配+加热+CAN+RS485通信 (Standard+heating+CAN communication+RS485 communication)	**JK-BD6A17S-15PDHCR**

3. 功能介绍及使用说明(Function introduction and usage instructions)

3.1. 主动均衡(Active equalization)

保护板采用主动均衡技术，均衡的原理是将高电压的电芯能量转移到低电压的电芯中，通过保护板这一媒介实现能量转移。用户在使用均衡功能之前需要设置电池基本参数，需要下载极空BMS-APP，下载之后在极空APP中参数设置页面设置电池类型，默认参数见第四章。设置完成电池类型后在常用设置中设置电池基本参数，包括单体数量、电池容量、触发均衡压差(可保持默认)、电压校准、电流校准等。

The protection board adopts active equalization technology,and the principle of equalization is to transfer the energy of the high-voltage cell to the low-voltage cell,and realize the energy transfer through the medium of the protection board.Before using the balancing function,users need to set the basic parameters of the battery and download the BMS-APP.After downloading,set the battery type on the parameter setting page of the APP.For default parameters,see Chapter 4.After setting the battery type,set basic battery parameters in common Settings,including the number of cells,battery capacity,trigger equalization differential pressure(the default value can be retained),voltage calibration,and current calibration.

用户可在APP的参数设置中自行设置均衡触发压差(mV)，均衡打开时，当电池包中任意两串电池压差大于设定值时均衡自动打开，压差小于设置值后关闭。默认均衡电流为最大值0.6A，用户可根据自己电池容量来调整。如无需均衡功能，可在APP的BMS控制页中将均衡开关设置为关闭状态。

Users can set the balance trigger pressure difference(mV)in the parameter setting of the APP.When the balance is turned on,the balance will be turned on automatically when the pressure difference of any two strings of batteries in the battery pack is greater than the set value,and the balance will be turned off when the pressure difference is less than the set value.The default balance current is 0.6 A.Users can adjust the balance current according to their own battery capacity.If you do not need the balancing function,you can set the balancing switch to off in the BMS control page of the APP.

3.2. UART功能(UART function)

保护板预留UART接口，支持用户自行选配GPS，可以满足个人以及企业用户对于电池定位的需求。

The protection board has a reserved UART interface, supporting users to optionally configure a GPS module by themselves. This can meet the battery positioning needs of both individual and enterprise users.

3.3. 显示屏功能(Display function)

保护板预留了显示屏接口，支持用户选配我司显示屏，方便查看电池信息，用户可根据实际需求进行选配。

The protection board is pre-equipped with a display interface, supporting users to optionally configure our company's display screen. This allows for convenient viewing of battery information, and users can make the selection based on their actual needs.

3.4. 加热功能(Heating function)

保护板支持选配加热功能，在低温条件下通过电阻加热器或加热膜来为电池加热，避免因低温导致的电池活性降低而无法充放电，设计加热电流为10A，用户可根据实际需求选配此功能以及功率匹配的加热设备。此功能用户可根据自己所处的的气温实际情况在极空APP中的BMS控制页进行开关操作。同时建议在加热回路中串联一个温控开关作为二级保护，防止极端情况出现热失控。建议选择45℃～65℃常闭型温控开关，当温度达到温控开关阈值后温控开关断开，切断加热回路防止继续加热。

The protection board supports the optional heating function.The resistance heater or heating film is used to heat the battery at low temperature to avoid the failure of charging and discharging due to the decrease of battery activity caused by low temperature.The designed heating current is 10A.This function allows users to switch operations in the BMS control page of the APP according to their actual temperature.At the same time,it is recommended to series a temperature control switch in the heating circuit as a secondary protection to prevent thermal runaway in extreme cases.You are advised to select a normally closed temperature switch of 45°C to 65°C.When the temperature reaches the threshold of the temperature switch,the temperature switch is turned off and the heating circuit is cut off to prevent further heating.

3.5. 报警功能(Alarm function)

保护板支持选配报警功能，在BMS检测到电池出现过温、过充、过放等存在安全风险的时候是对外进行报警提示。

The protection board supports optional alarm function.When the BMS detects that there are security risks such as overtemperature,overcharge,and overdischarge of the battery,the alarm is alerted to the outside.

3.6. 电池组并联功能(Battery parallel function)

保护板支持选配电池组并联功能，以满足用户对于储能电池组的使用需求，此功能需要搭配并联模块同步使用，同时在APP中关闭“禁用充电限流”功能即可。

The protection board supports the optional parallel function of battery packs to meet the user's demand for the use of energy storage battery packs.This function needs to be used synchronously with parallel modules,and the"disable charging current limiting"function can be turned off in the APP.

3.7. ACC/充电器检测功能(ACC/Charger detection function))

保护板支持选配ACC和充电器检测功能，可用于使能放电和充电。使能放电有两种实现方式，一种是给ACC+和ACC-之间施加电压(这种方式可以用来激活保护板)，输入电压范围是4.5V-15V，还有一种方式是直接将ACC+和5V+短路，这两种实现方式二选一。同样的，使能充电也有两种方式，一种是给CD+和CD-之间施加电压(这种方式可以用来激活保护板)，输入电压范围是4.5V-15V，另一种方式是直接将CD+和5V+短路，这两种实现方式也是二选一，用户可根据实际需求自行配置。

The protection board supports optional ACC and charger detection functions, enabling discharge and charging. There are

two ways to enable discharging, and users can choose either one. One is to apply a voltage between ACC+ and ACC- — this method can also activate the protection board — with an input voltage range of 4.5V-15V. The other is to directly short-circuit ACC+ and 5V+. Similarly, there are two ways to enable charging, and users can also choose either one. One is to apply a voltage between CD+ and CD- — this method can also activate the protection board — with an input voltage range of 4.5V-15V. The other is to directly short-circuit CD+ and 5V+. Users can configure the method independently according to their actual needs.

3.8. 放电预充功能(Discharge precharge function)

保护板标配放电预充功能，默认预充时间为5S，用户可以根据自身需求来选择打开或者关闭预充，预充时间为0则为关闭预充功能。

The protection board is standard-equipped with a discharge pre-charging function, The default precharge time is 5S. Users can choose to open or close the precharge according to their own needs.

3.9. 充电过压保护及恢复(Charge overvoltage protection and recovery)

保护板标配充电过压保护，用户可以在极空APP中的参数设置页中自行设置单体过充保护电压以及单体过充恢复电压，电池充电时当任意一串电池出现过压后保护板将关闭充电来保护电池，当所有单体电压均低于单体过充恢复电压之后保护板再次开启充电，以防止电池过充从而损坏电芯。

The protection board is equipped with charge overvoltage protection as standard.Users can set the single overcharge protection voltage and single overcharge recovery voltage in the parameter setting page of the APP.When any string of batteries is overvoltage during battery charging,the protection board will turn off the charging to protect the battery.To prevent the battery from overcharging and damaging the cell.

3.10. 放电欠压保护及恢复(Discharge undervoltage protection and recovery)

保护板标配放电欠压保护功能，用户可以根据自身电池类型在极空APP中的参数设置页设置电池欠压保护电压(V)、电池欠压恢复电压(V)、自动关机电压(V)。当保护板处于放电状态时，当任意一串电池的电压低于设置的欠压保护电压值，保护板触发欠压保护同时关闭放电来保护电芯，防止过放损坏电芯。当电池充电至所有单体电芯电压均高于欠压恢复电压时，欠压保护解除将再次打开放电。当电池任意一串电芯的电压低于自动关机电压时，保护板将自动关机来保护电芯。

The protection board is equipped with discharge undervoltage protection function as standard.Users can set battery undervoltage protection voltage(V),battery undervoltage recovery voltage(V)and automatic shutdown voltage(V)in the parameter setting page of the APP according to their own battery type.When the protection board is in the discharge state,when the voltage of any string of batteries is lower than the set undervoltage protection voltage value,the protection board triggers the undervoltage protection and closes the discharge at the same time to protect the battery cell and prevent overdischarge from damaging the battery cell.When the battery is charged until the voltage of all individual cells is higher

than the undervoltage recovery voltage,the undervoltage protection release will turn on the discharge again.When the voltage of any string of batteries is lower than the automatic shutdown voltage,the protection board will automatically shut down to protect the battery.

3.11. 充电过流保护及恢复(Charge overcurrent protection and recovery)

保护板标配充电过流保护功能，用户可以根据自身电池容量以及充电器输出电流自行在极空APP中的参数设置页设置持续充电电流(A)、充电过流延时(S)、充电过流解除(S)。当充电电流大于设置的持续充电电流时，经过设置的充电过流延时时间后触发充电保护，保护板关闭充电，经过充电过流解除时间后保护板将再次打开充电。

The protection board is equipped with the charging overcurrent protection function as standard.Users can set the continuous charging current(A),charging overcurrent delay(S)and charging overcurrent release(S)in the parameter setting page of the APP according to their own battery capacity and the output current of the charger.When the charging current is greater than the set continuous charging current,the charging protection will be triggered after the set charging overcurrent delay time,and the protection board will close the charging,and the protection board will open the charging again after the charging overcurrent release time.

3.12. 放电过流保护及恢复(Discharge overcurrent protection and recovery)

保护板标配放电过流保护功能，用户可以根据自身电池容量以及负载输出电流自行在极空APP中的参数设置页设置持续放电电流(A)、放电过流延时(S)、放电过流解除(S)。当放电电流大于设置的持续放电电流时，经过设置的放电过流延时时间后触发放电过流保护，保护板关闭放电，经过放电过流解除时间后保护板将再次打开放电。(注意：最大可设置持续放电电流不可超过设计值150A)

The protection board is equipped with the discharge overcurrent protection function as standard.Users can set the continuous discharge current(A),discharge overcurrent delay(S)and discharge overcurrent release(S)in the parameter setting page of the APP according to their own battery capacity and load output current.When the discharge current is greater than the set continuous discharge current,the discharge overcurrent protection is triggered after the set discharge overcurrent delay time,and the protection board closes the discharge.After the discharge overcurrent release time,the protection board starts the discharge again.(Note:The maximum continuous discharge current can not exceed the design value of 150A)

3.13. 过温保护及恢复(Over temperature protection and recovery)

保护板标配充放电过温保护功能，用户可以根据自身需求在极空APP中的参数设置页设置充电过温保护(℃)、充电过温恢复(℃)、放电过温保护(℃)、放电过温恢复(℃)。当保护板采集到的温度数据高于设置的设置的充电过温保护值时，保护板关闭充电，当温度恢复到低于设置的充电过温恢复值以下时再次打开充电，放电过温保护以及恢复同理。

The protection board is equipped with charge and discharge overtemperature protection function as standard.Users can

set charge overtemperature protection(℃),charge overtemperature recovery(℃),discharge overtemperature protection(℃),and discharge overtemperature recovery(℃)on the parameter setting page of the APP according to their own needs.When the temperature data collected by the protection board is higher than the set charge overtemperature protection value,the protection board shuts down the charging,and turns on the charging again when the temperature is lower than the set charge overtemperature recovery value.The same applies to the discharge overtemperature protection and recovery.

3.14. 低温保护及恢复(Low temperature protection and recovery)

保护板标配充电低温保护功能，用户可以根据自身需求在极空APP中的参数设置页设置充电低温保护(℃)、充电低温恢复(℃)。当保护板采集到的温度数据低于设置的设置的充电低温保护值时，保护板关闭充电，当温度恢复到高于设置的充电低温恢复值时再次打开充电，建议冬天极寒地区的用户选配加热功能以便更好的保护电芯。

The protection board is equipped with charging low temperature protection function as standard.Users can set charging low temperature protection(℃)and charging low temperature recovery(℃)in the parameter setting page of the APP according to their own needs.When the temperature data collected by the protection board is lower than the set charging low temperature protection value,the protection board closes the charging,and turns on the charging again when the temperature returns to higher than the set charging low temperature recovery value.It is recommended that users in extremely cold areas in winter choose the heating function to better protect the battery cell.

3.15. 短路保护及恢复(Short circuit protection and recovery)

保护板标配短路保护功能，此项参数无需用户自行设置触发短路保护的电流，用户如果需要可以根据自身需求在极空APP中的参数设置页设置短路保护延时(us)以及短路保护恢复时间(S)。当用户首次连接充电器充电时，外部线路正确连接后，在BMS控制页中打开充电后若触发充电短路保护，可以增大短路保护延时，导致保护的原因为充电器开启输出瞬间峰值电流过大引起，此时经过短路保护恢复时间后短路保护解除，保护板打开充电。当用户初次连接负载使用时出现放电短路保护后，在确保外部接线不存在短路时可通过增加短路保护延时来解决，因为部分负载内部的电容较大导致开启瞬间电流可能较大会导致触发短路保护，此时经过短路保护恢复时间后短路保护解除，保护板打开放电。

The protection board is equipped with the short circuit protection function as standard.The user does not need to set the current that triggers the short circuit protection by himself.If necessary,the user can set the short circuit protection delay(us)and short circuit protection recovery time(S)on the parameter setting page of the APP.When the user connects the charger for the first time to charge,if the charging short circuit protection is triggered after the external line is correctly connected in the BMS control page,the short circuit protection delay can be increased.The cause of the protection is that the peak current of the charger is too large when the charger is turned on and output.In this case,the short circuit protection is lifted after the short circuit protection recovery time,and the protection board is turned on and charged.When the user is connected to the load for the first time,the discharge short-circuit protection occurs,and the short-circuit protection delay can

be increased to ensure that there is no short circuit in the external wiring.Because the capacitance inside some loads is large,the opening instantaneous current may be too large,which may trigger the short-circuit protection.In this case,the short-circuit protection is removed after the short-circuit protection recovery time,and the protection board is opened and discharged.

3.16. 应急开关(Emergency switch)

保护板标配应急开关功能，当用户正常使用时如果出现过温、过放、过充、掉串等问题时，在极空APP中BMS控制页打开应急开关后，保护板将同时打开充放电30分钟，给予用户一个应急使用时间，在此过程中假如单体电芯电压已到达自动关机电压，保护板也将持续工作直至此次应急开关30分钟周期结束，避免出现在道路上抛锚等险情。

The protection board is equipped with the standard emergency switch function.When the user is in normal use,if there are problems such as over-temperature,over-discharge,over-charge,and drop string,the protection board will turn on the charge and discharge for 30 minutes at the same time after the emergency switch is opened on the BMS control page in the APP,giving the user an emergency use time.In this process,if the voltage of the single cell has reached the automatic shutdown voltage,the protection board will turn on the charge and discharge for 30 minutes at the same time.The protective plate will also continue to work until the end of the 30-minute emergency switch cycle to avoid dangerous situations such as breaking down on the road.

3.17. 智能休眠(Intelligent sleep)

保护板标配智能休眠功能，用户可根据自身需求在极空APP的BMS控制页选择打开或者关闭。此功能目的为在保护板处于待机状态时(连续26小时充放电电流小于1A)关闭保护板以减少保护板自身对于电池的能量消耗，当用户需要再次激活使用时可以使用按钮激活或者充电器激活即可。

The protection board is equipped with intelligent sleep function as standard,and users can choose to open or close the BMS control page of the APP according to their own needs.The purpose of this function is to close the protection board when the protection board is in standby state(the charging and discharging current is less than 1A for 26 consecutive hours)to reduce the energy consumption of the protection board itself to the battery.When the user needs to activate it again,the button can be activated or the charger can be activated.

3.18. 通信功能(communication function)

保护板支持选配CAN、RS485、一线通通信功能，用户可以根据自身需求来进行选配，在使用保护板的通信功能时用户可以根据自身的使用需求以及场景自行设置保护板的地址以及通信协议，具体通信协议见极空保护板通信协议文档。

The protection board supports optional CAN, RS485, and One-Wire communication functions,which can be selected according to your own requirements.When using the communication function of the protection board,you can set the

address and communication protocol of the protection board according to your own requirements and scenarios.For specific communication protocols,see the communication protocol document of the Jikong Protection Board.

4. 主要参数(Main parameter)

4.1. 保护板基本参数（Protection board Basic parameter）

序号 (Serial number)	项目 (Project)	具体参数 (argument)	单位 (Unit)
1	供电电压(Supply voltage)	20-100	V
2	运行功耗(Operating power consumption)	≤800	mW
3	工作温度(Operating temperature)	-30-70	℃
4	最大采集串数 (Maximum number of collection strings)	24	串 （String）
5	最大均衡电流(Maximum balancing current)	0.6	A
6	最大充电电流(Maximum charging current)	150	A
7	最大放电电流(Maximum discharge current)	150	A
8	最大瞬时电流(Maximum instantaneous current)	300	A
9	最大回路内阻(Maximum internal loop resistance)	0.36	mΩ
10	保护板尺寸(Protective plate size)	152*83*13.6	mm
11	成品重量(Finished weight)	372	g

4.2. 默认参数(Default parameters)

序号 NUM	参数 PARA	三元默认 LI-ION	铁锂默认 LIFEPO4	钛酸锂默认 LTO	单位 (unit)
1	均衡起始电压 (balancing initial voltage)	3	3	2	V
2	最大均衡电流 (Maximum balancing current)	0.6	0.6	0.6	A
3	单体过充电压 (Unit overcharge voltage)	4.2	3.6	2.7	V
4	单体过充保护恢复 (Single overcharge protection recovery)	4.18	3.55	2.65	V
5	单体欠压保护 (Monomer undervoltage protection)	2.82	2.6	1.8	V
6	单体欠压保护恢复 (Single undervoltage protection recovery)	2.85	2.65	1.85	V
7	自动关机电压 (Automatic shutdown voltage)	2.8	2.5	1.7	V
8	SOC-0%电压 (SOC-0%voltage)	2.9	2.6	1.85	V
9	SOC-100%电压 (SOC-100%voltage)	4.18	3.5	2.65	V
10	触发均衡压差 (Trigger balancing differential pressure)	0.01	0.01	0.01	V
11	充电过流保护延时 (Charging overcurrent protection delay)	30	30	30	秒 (S)
12	充电过流保护解除时间 (Charge overcurrent protection release time)	60	60	60	秒 (S)
13	放电过流保护延时 (Discharge overcurrent protection delay)	300	300	300	秒 (S)
14	放电过流保护解除时间 (Discharge overcurrent protection release time)	60	60	60	秒 (S)
15	短路保护延时 (Short-circuit protection delay)	5	5	5	微秒 (uS)

16	短路保护解除时间 (Short circuit protection release time)	30	30	30	秒 (S)
17	充电过温保护温度 Charging overtemperature protection temperature	70	70	70	℃
18	充电过温恢复温度 (Charge overtemperature restore temperature)	60	60	60	℃
19	放电过温保护温度 (Discharge overtemperature protection temperature)	70	70	70	℃
20	放电过温恢复温度 (Discharge overtemperature recovery temperature)	60	60	60	℃
21	充电低温保护温度 (Charging low temperature protection temperature)	-20	-20	-20	℃
22	充电低温恢复温度 (Charge low temperature to restore temperature)	-10	-10	-10	℃
23	MOS过温保护温度 (MOS Overtemperature protection temperature)	100	100	100	℃
24	MOS过温保护恢复温度 (MOS Overtemperature protection recovery temperature)	80	80	80	℃
25	设备地址 (Device address)	0	0	0	/
26	放电预充时间 (Discharge precharge time)	5	5	5	秒 (S)

5. 接口定义(Interface definition)

5.1. 产品外形(Product Appearance)

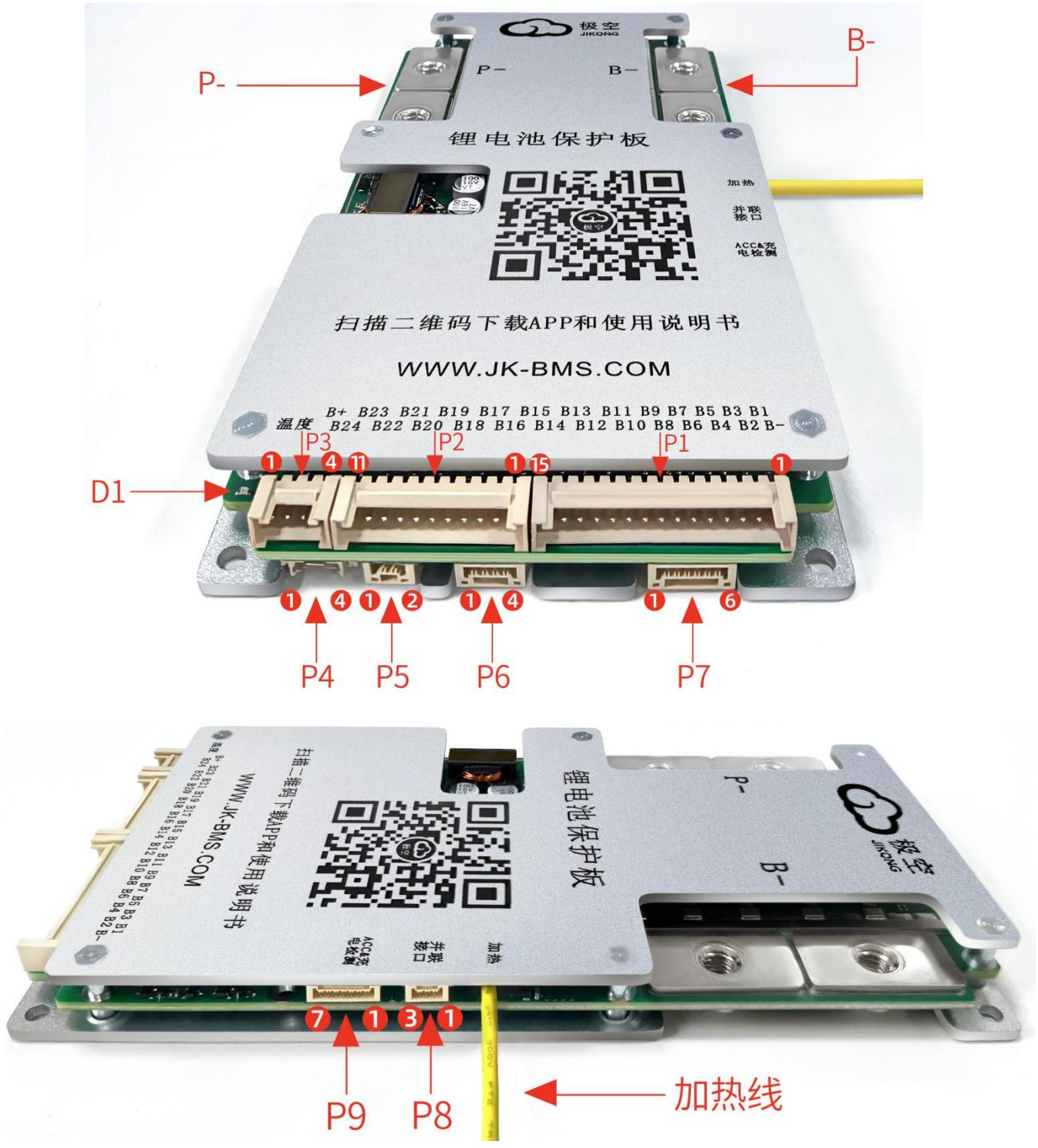

JK-BD6A24S-15PD连接器示意图

Schematic diagram of the JK-BD6A24S-15PD connector

5.2. 产品连接器、LED定义(Product connector,LED definition)

接口定义(Interface definition)

连接器(coupler)	连接器型号(Type of connector)	接口名称(Interface name)	管脚号(Pin number)	JK-BD6A24S-15PD	
				名称（Name）	定义(definition)
P1	HY2.0-15P	均衡与采集接口(Balance with Acquisition interface)	1	B-	电池总负极(Total negative battery)
			2	B1	第1串电池正极(The first battery positives)
			3	B2	第2串电池正极(The second battery positive)
			4	B3	第3串电池正极(The third battery positive)
			5	B4	第4串电池正极(The fourth battery positive)
			6	B5	第5串电池正极(The fifth battery positive)
			7	B6	第6串电池正极(The sixth battery positive)
			8	B7	第7串电池正极(The seventh battery positive)
			9	B8	第8串电池正极(The eighth battery positive)
			10	B9	第9串电池正极(The ninth battery positive)
			11	B10	第10串电池正极(The tenth battery positive)
			12	B11	第11串电池正极(The eleventh battery positive)
			13	B12	第12串电池正极(The twelfth battery positive)
			14	B13	第13串电池正极(The thirteenth battery positive)
			15	B14	第14串电池正极(The fourteenth battery positive)
P2	HY2.0-11P		1	B15	第15串电池正极(The fifteenth battery positive)
			2	B16	第16串电池正极(The sixteenth battery positive)
			3	B17	第17串电池正极(The seventeenth battery positive)
			4	B18	第18串电池正极(The eighteenth battery positive)
			5	B19	第19串电池正极(The nineteenth battery positive)
			6	B20	第20串电池正极(The twentieth battery positive)
			7	B21	第21串电池正极(The twenty-first battery positive)
			8	B22	第22串电池正极(The twenty-second battery positive)
			9	B23	第23串电池正极(The twenty-third battery positive)

			10	B24	第24串电池正极（电池总正） (The twenty-fourth battery positive,Total battery positive)
			11	B+	保护板电源,接电池总正 (Protection board power supply,connected to the battery)
P3	HY2.0-4P	温度接口 (Temperature interface)	1	T1A	第1个温度传感器A管脚 (First temperature sensor pin A)
			2	T1B	第1个温度传感器B管脚 (First temperature sensor pin B)
			3	T2A	第2个温度传感器A管脚 (Second temperature sensor pin A)
			4	T2B	第2个温度传感器B管脚 (Second temperature sensor pin B)
P4	1.25T-4PWT	UART接口 (UART interface)	1	GND	电源/信号地(Power/signal ground)
			2	RX	UART_RX,3.3V
			3	TX	UART_TX,3.3V
			4	VGPS	电源输出，电压与B+接近 (Power output,the voltage is close to B+)
P5	A1254WF-2A 选配 (Optional)	蜂鸣器接口 (Buzzer interface)	1	GND	蜂鸣器电源负极（Buzzer power negative）
			2	VCC	蜂鸣器电源正极（Buzzer power supply positive）
P6	A1254WF-4A 选配 (Optional)	通讯接口 (Communication interface)	1	CAN_L	CAN信号负极(CAN signal negative terminal)
			2	CAN_H	CAN信号正极(CAN signal positive terminal)
			3	RS485_A	RS485信号正极(RS485 signal positive terminal)
			4	RS485_B	RS485信号负极(Negative terminal of RS485 signal)
P7	A1254WF-6A	显示屏 接口 (Display interface)	1	K-	激活信号负极(Activation signal negative electrode)
			2	K+	激活信号正极(Activate the positive signal)
			3	GND	电源负极(Negative terminal)
			4	B	显示屏RS485信号负极(Display RS485 signal negative)
			5	A	显示屏RS485信号正极

					(The display RS485 signal is positive)
			6	VCC	显示屏电源输出(Display power output)
P8	A1254WF-3A 选配 (Optional)	并联接口（parallel interface）	1	P-status	并联模块状态信号（Parallel module status signal）
			2	P-EN	并联模块使能信号，输出低电平开启并联模块（Parallel module enable signal,output low level Turn on parallel module）
			3	GND	信号地（signal ground）
P9	A1254WF-7A 选配 (Optional)	ACC接口（ACC interface）	1	5V+	5V电源正极 (Positive terminal of 5V power supply)
			2	C_Detect+	充电机输出12V正极(The charger output 12V positive)
			3	C_Detect-	充电机输出12V负极(The charger output 12Vnegative)
			4	NC	NC，不接线（Empty）
			5	ACC-	ACC负极（ACC Negative）
			6	ACC+	ACC正极（ACC Positive）
			7	5V+	5V电源正极 (Positive terminal of 5V power supply)
加热线 (Heating wire)	16AWG-橘黄色-15CM 选配(Optional)		1	HT-	加热器件负极 (Heater element negative electrode)
D1	蓝牙连接指示灯，当蓝牙连接上保护板时指示灯常亮，断开连接时指示灯闪烁。(Bluetooth connection indicator:When the Bluetooth is connected to the protection board,the indicator is steady on,and when the connection is disconnected,the indicator is blinking.)				
P-	接外部负载或者充电器负极 (Connect to external load or negative terminal of charger)				
B-	接电池负极(Connect to the negative battery terminal)				

5.3. 产品尺寸(Product size)

JK-BD6A24S-15PD系列保护板尺寸为152mm×83mm×13.6mm如下图所示：

The size of JK-BD6A24S-15PD series protection board is 152mm×83mm×13.6mm as shown in the following figure：

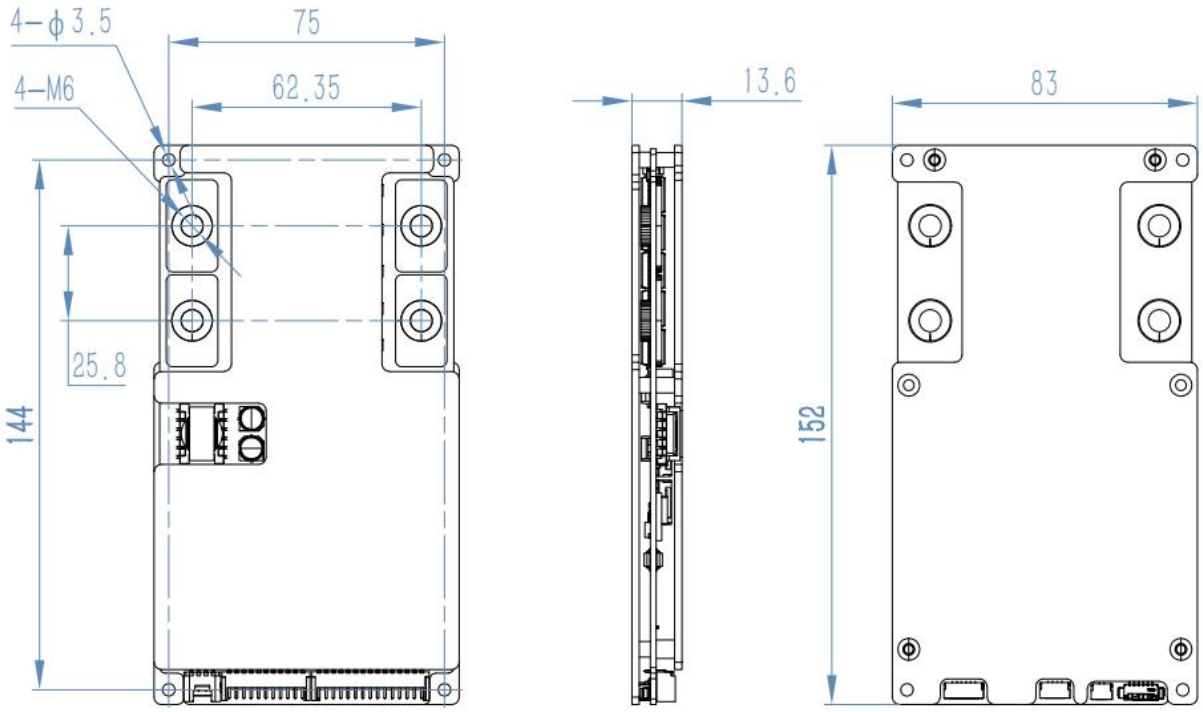

JK-BD6A24S-15PD外形尺寸

Dimensions of JK-BD6A24S-15PD

5.4. 安装方法(Installation method)

JK-BD6A24S-15PD系列保护板适用于7-24串的的锂电池组，不同电芯数量的电池组接线方法不同，具体接线方式如下图所示。

JK-BD6A24S-15PD series protection board is suitable for 7-24 series of lithium battery pack,different cell number of battery pack wiring methods are different,the specific wiring method is shown in the following figure.

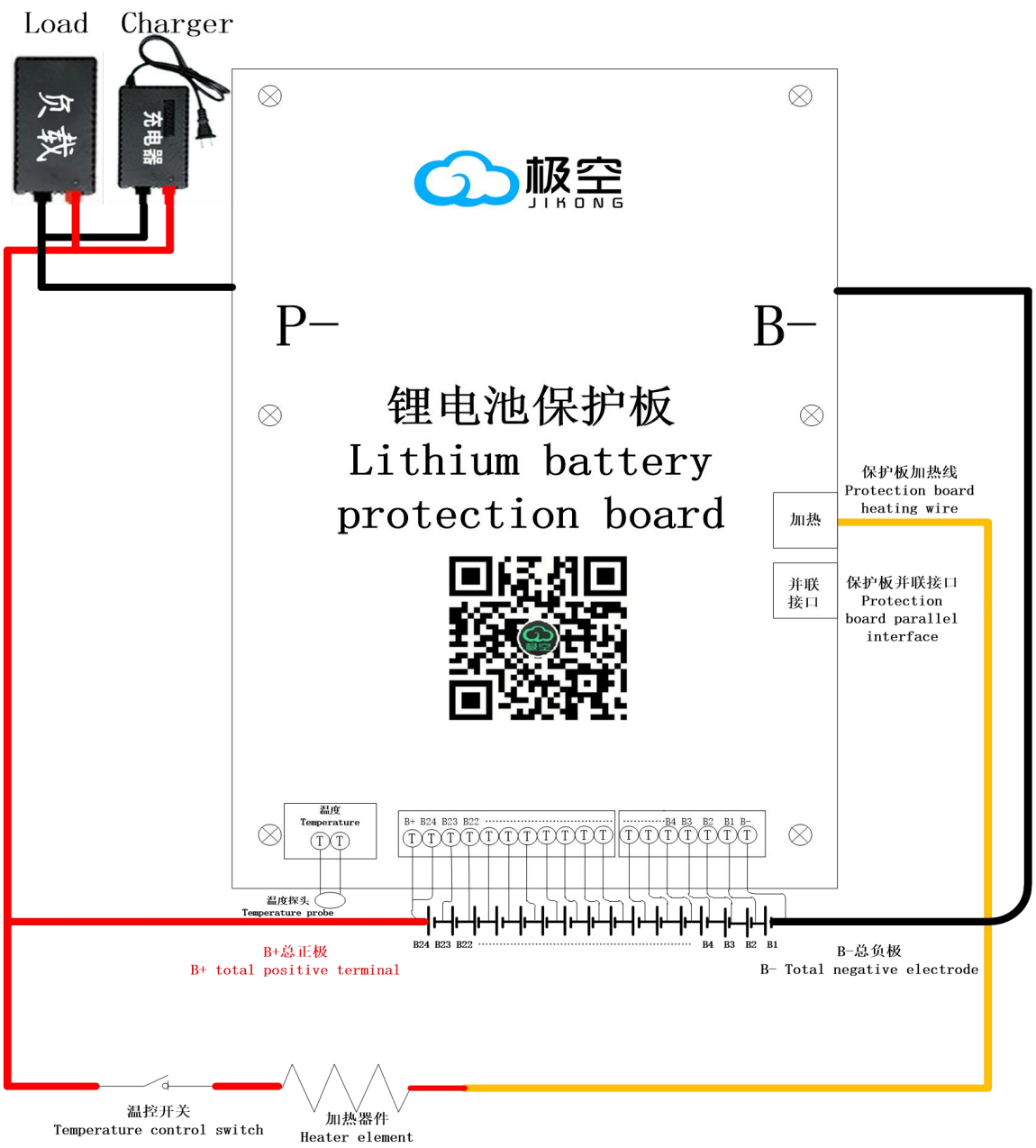

JK-BD6A24S-15PD-24S接线图

JK-BD6A24S-15PD-24S wiring diagram

6. 设备使用说明(APP operation Instructions)

6.1. APP安装（APP installation）

通过扫描下图所示的二维码可以获取与产品配套的手机APP

Mobile APP matching the product can be obtained by scanning the QR code shown in Figure.Android Version 7 minimum is required for the Android APP.

手机APP链接二维码

Mobile APP link QR code

6.2. 设备激活(Device activation)

在保护板开机之前，请再次确认均衡线连接是否正常，“P-”与“B-”是否连接正确。检查保护板是否已经稳妥的与电芯固定，确认无误后才可以接通给保护板上电，否则可能造成工作异常、甚至烧毁等严重后果。

确认上述操作无误以后，可以给保护板上电。保护板没有上电控制开关，设计为充电激活模式(充电器电压比电池电压高2V)，即电池组装完成以后需要接上充电器让保护板开机工作。

保护板激活除了充电激活以外还支持按键激活以及显示屏激活,选配显示屏以及按钮的用户只需将线缆插入显示屏接口，按下按键即可激活。

Before starting the protection board,check whether the balance cable is properly connected and whether P-and B-are correctly connected.Check whether the protection board has been securely fixed with the battery core,and confirm that it is correct before you can switch on the protection board,otherwise it may cause serious consequences such as abnormal work and even burning.

After confirming the preceding operations,power on the protection board.The protection board has no power-on control switch,and is designed for charging activation mode(the charger voltage is 2V higher than the battery voltage),that is,after the battery assembly is completed,the charger needs to be connected to make the protection board work.

In addition to charging activation,the protection board also supports key activation and display activation.Users who choose the display screen and button only need to insert the cable into the display interface and press the button to activate.

6.3. 参数设置(Parameter setting)

详见“保护板参数设置说明”。

Please refer to the"Instructions for Setting Protection Board Parameters"for details.

7. 配件清单(Accessories list)

序号	名称	型号	数量
1	均衡采样线	JHX-2.0-15P+11P/750mm JHX-2.0-15P+7P/750mm	1
2	温度线	10K 1% 3950 长度40CM HY2.0-4P插头	1
3	外六角组合螺丝	M6*10	4
4	声光报警器线缆 选配(Optional)	GH1.25mm-2P-单头-40cm	1
5	CAN&485线 选配(Optional)	GH1.25mm-4P转SM公头-2.54-2P+2P-15CM+10CM-CAN-485	1
6	RS485线 选配(Optional)	GH1.25mm-4P转SM公头+母头-2.54-2P-15CM+10CM-485	1
7	CAN线 选配(Optional)	GH1.25mm-4P转SM公头+母头-2.54-2P-15CM+10CM-CAN	1
8	ACC线 选配(Optional)	GH1.25mm-7P带扣-26AWG-30CM	1
9	一线通线 选配(Optional)	GH1.25-6P-2芯(485A) -15cm	1